Product Specification



Type	EC Axial Fan
Model	BC-A450C-EC-05

Basic Parameters

Phase	~	1
Rated Voltage	VAC	115
Frequency	Hz	50/60
Rated Speed	RPM	1400
Max. Input Power	W	380
Max. Input Current	A	3.4
Sound level	dBA	75
Certification	~	CE、RoHS
Min. Ambient Temperature	℃	-25
Max. Ambient Temperature	℃	60

Technical Features

Dimensions	450*450*177mm
Material of Impeller	Plastic
Direction of Rotation	Anticlockwise, Seen on Rotor
Surface of Rotor	Plastic Spraying
Type of Protection	IP55
Insulation Class	B
Operation Mode	S1
Bearing Type	Ball Bearing
Motor Protection	Locked Rotor Protection, Thermal Protection, Less and Excessive Voltage Protection, Overcurrent Protection, Soft Start
Length of Cable	500±20mm
RoHS	All Material According with RoHS
Min./Max. Humidity	5% - 90% RH
Motor Type	External Rotor EC Motor
Deviation of Impeller in Axial Direction	≤ 0.5 mm
Deviation of Impeller in Radial Direction	≤ 0.5 mm

Air Performance

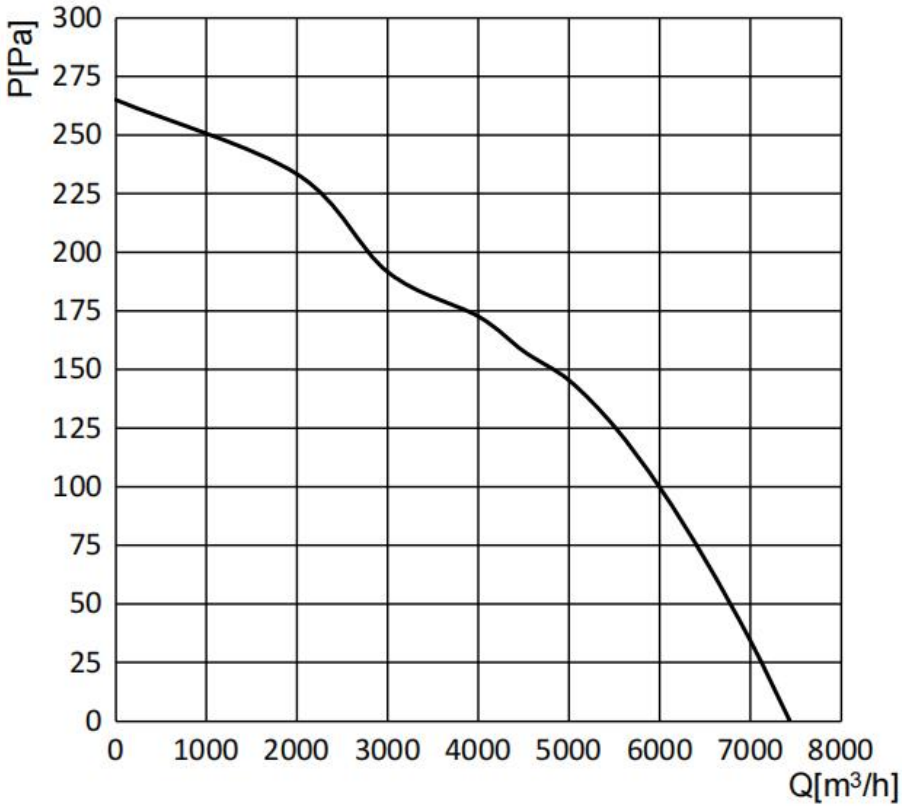

Outline Drawing

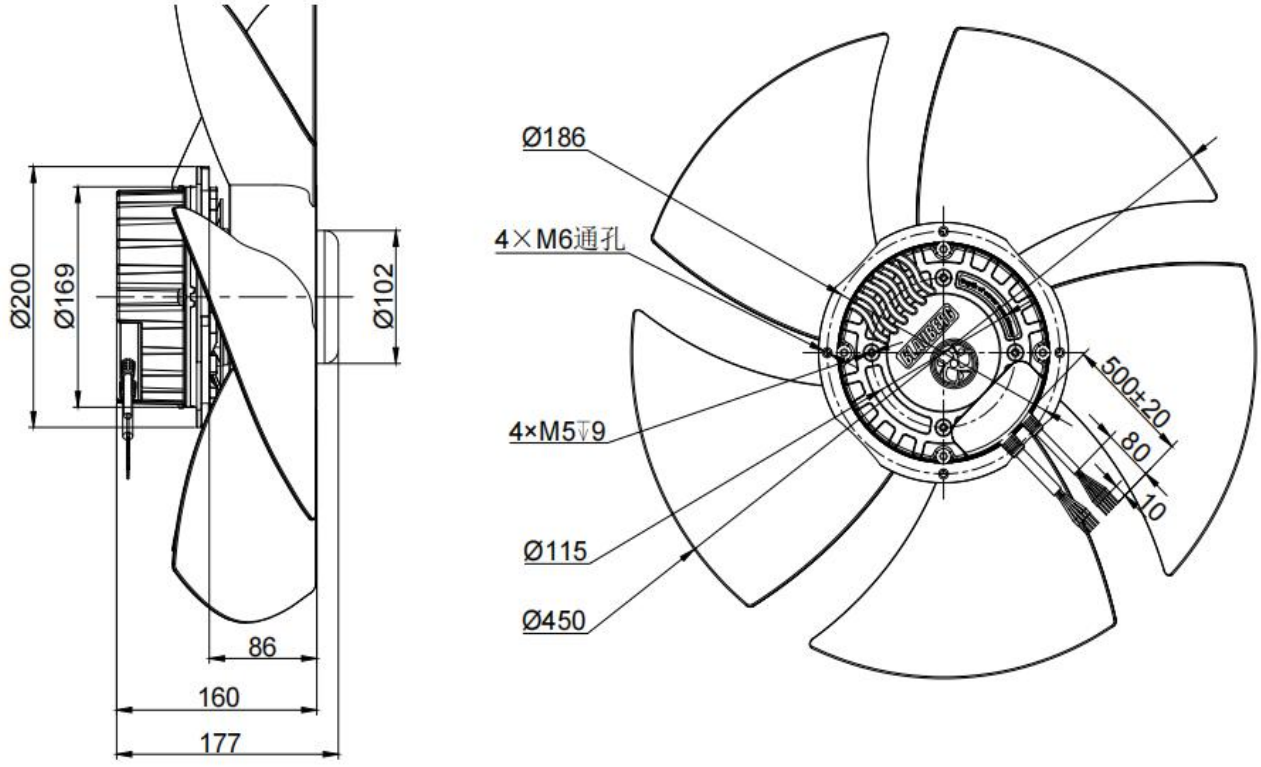

Wiring Diagram

Line	Connection		Colour	Function
Power Line		PE	Green Yellow	Protective Earth
	U1	L	Brown	Live Wire
	U2	N	Black	Neutral Wire
	U3	NC	White	Normally Closed Switch、Circuit Breaker
	U4	COM	Gray	Common Port
Control Line	U5	RSA	Brown	RS485 Port
	U6	RSB	Gray	RS485 Port
	U7	PWM Speed Control	Yellow	0~10V & PWM Compatible Line
	U8	FG	White	5 Pulses/roll
	U9	+10V	Red	Voltage+10V. Max. Current 10mA
	U10	GND	Blue	GND

Power Line

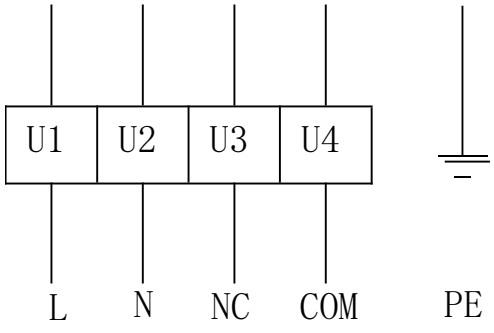

Control Line

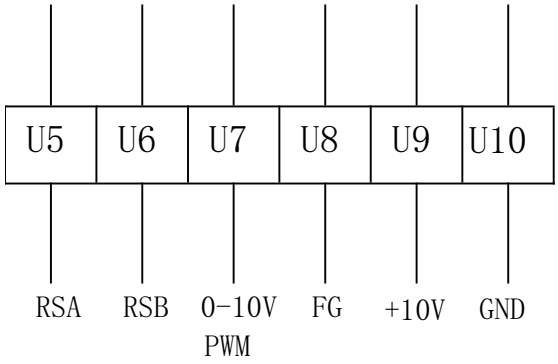

Additional Notes

1. The power line and control line of the fan should be connected in strict accordance with the wiring diagram to prevent the fan from burning out;
2. Do not connect the white signal wire directly to the red signal wire or the external DC power supply;
3. If the fan does not work after starting, please check the input voltage of the speed regulation, which may be improperly connected. To prevent hand or other personal injury caused by sudden start of the fan; Do not touch the impeller or rotor after electrifying;
4. It takes a few seconds for the fan to start after power on. In order to prevent personal injury, do not touch the impeller or rotor under the condition of power electrifying or low speed operating;
5. Fan EMC (test standard EN55014), additional magnetic ring on the power line required, the magnetic ring is excluding in the fan;
6. Persons lacking physical, mental or sensory abilities and appropriate practical experience or expertise cannot use the fan unless directed by a person responsible for its safety. Keep out of reach of children;
7. If the power line is damaged, the manufacturer must replace the power cord;
8. As a part of the fan, the motor cannot be used alone without impeller or load;
9. After the product packaging has been disassembled, it should be repackaged if it needs to be kept in storage. The product shall be stored in a clean, well-ventilated warehouse with ambient temperature of -40℃~+80℃, relative humidity of no more than 95%, no corrosive gases in the air, and 15cm above the ground;
10. Please read this technical specification carefully before use.